Electrolux PROFESSIONAL

Modular Cooking Range Line 700XP Full Module Freestanding Electric Char-Grill

ITEM #

MODEL #

NAME #

SIS #

AIA #



371242 (E7GREHGCFU) Full module electric Grill free standing

Short Form Specification

Item No.

To be installed on height adjustable feet in stainless steel. Heating via incoloy armoured heating elements placed below the cooking plate. Cooking surface grids in enameled cast iron, easily removable for cleaning. Exterior panels in stainless steel with Scotch Brite finish. One piece pressed work top in 1.5 mm thick stainless steel. Right-angled side edges to allow flush-fitting junction between units.

APPROVAL:

Main Features

- Stainless steel high splash guards on the rear and sides of cooking surface. Splash guards can be easily removed for cleaning and are dishwasher-safe.
- Unit delivered with four 50 mm legs in stainless steel as standard (all round Stainless steel kick plates as option).
- Energy regulation through a control knob.
- Heating element can be tilted frontally for easy cleaning.
- The low temperature of the external panels allow to work in safety.
- Each half module is heated via incoloy armoured heating elements below the cooking plate.
- Separate controls for each half module.
- Cooking grids made in highly resistant enameled cast iron for easy cleaning.

Construction

- All exterior panels in Stainless Steel with Scotch Brite finishing.
- One piece pressed 1.5 mm work top in Stainless steel.
- Model has right-angled side edges to allow flush fitting joints between units, eliminating gaps and possible dirt traps.
- IPx4 water protection.

Included Accessories

- 1 of Scraper for free standing grills — PNC 206422

Optional Accessories

- Junction sealing kit — PNC 206086 ❑
- Kit 4 wheels - 2 swivelling with brake - it is mandatory to install Base support and wheels — PNC 206135 ❑
- Flanged feet kit — PNC 206136 ❑
- Frontal kicking strip for concrete installation, 1000mm — PNC 206150 ❑
- Frontal kicking strip for concrete installation, 1200mm — PNC 206151 ❑
- Frontal kicking strip for concrete installation, 1600mm — PNC 206152 ❑
- Frontal kicking strip, 800mm (not for refr-freezer base) — PNC 206176 ❑
- Frontal kicking strip, 1000mm (not for refr-freezer base) — PNC 206177 ❑
- Frontal kicking strip, 1200mm (not for refr-freezer base) — PNC 206178 ❑
- Frontal kicking strip, 1600mm (not for refr-freezer base) — PNC 206179 ❑
- Kit 4 feet for concrete installation (not for 900 line free standing grill) — PNC 206210 ❑

• Central support for installation of drawers and grid (on 800/1200mm bases) and of doors (on 1200mm bases)	PNC 206245	❑
• Pair of side kicking strips	PNC 206249	❑
• Pair of side kicking strips for concrete installation	PNC 206265	❑
• Water filling tap for free standing grills	PNC 206281	❑
• Chimney upstand, 800mm	PNC 206304	❑
• Right and left side handrails	PNC 206307	❑
• Back handrail 800 mm	PNC 206308	❑
• Base support for feet or wheels - 800mm (700/900)	PNC 206367	❑
• Base support for feet or wheels - 1200mm (700/900)	PNC 206368	❑
• Base support for feet or wheels - 1600mm (700/900)	PNC 206369	❑
• Base support for feet or wheels - 2000mm (700/900)	PNC 206370	❑
• Rear paneling - 800mm (700/900)	PNC 206374	❑
• Rear paneling - 1000mm (700/900)	PNC 206375	❑
• Rear paneling - 1200mm (700/900)	PNC 206376	❑
• Stainless steel grids with drain shape for free standing wide grills (700XP)	PNC 206411	❑
• Scraper for grids with drainage channels - top grills	PNC 206421	❑
• Scraper for free standing grills	PNC 206422	❑
• 2 side covering panels for free standing appliances	PNC 216000	❑
• Frontal handrail, 800mm	PNC 216047	❑
• Frontal handrail, 1200mm	PNC 216049	❑
• Frontal handrail, 1600mm	PNC 216050	❑
• Large handrail - portioning shelf, 800mm	PNC 216186	❑

The company reserves the right to make modifications to the products without prior notice. All information correct at time of printing.

Modular Cooking Range Line
700XP Full Module Freestanding Electric Char-Grill

Front

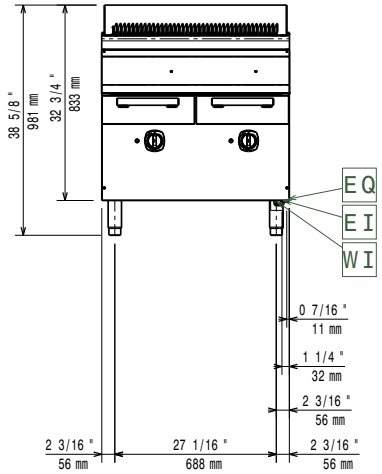

Side

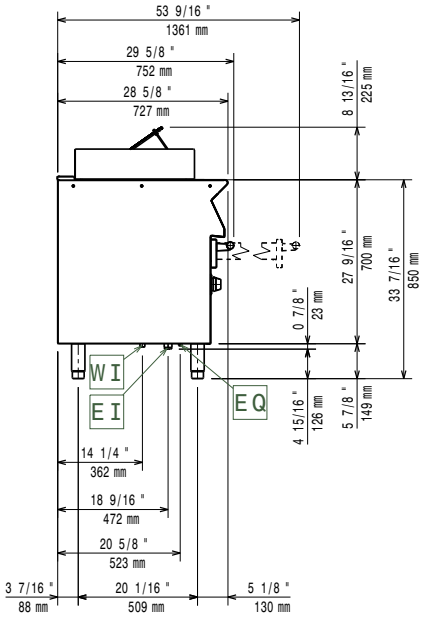

EI = Electrical inlet (power)
EQ = Equipotential screw

Top

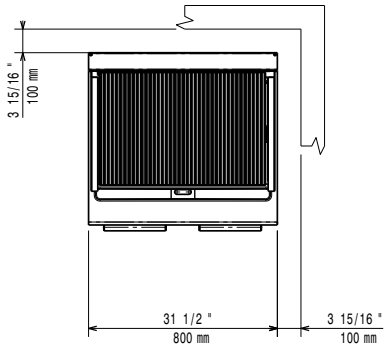

Electric

Supply voltage:	380-400 V/3N ph/50-60 Hz
Electrical power max.:	12 kW
Total Watts:	12 kW

Key Information:

If appliance is set up or next to or against temperature sensitive furniture or similar, a safety gap of approximately 150 mm should be maintained or some form of heat insulation fitted.

Net weight:	87 kg
Shipping weight:	99 kg
Shipping height:	1200 mm
Shipping width:	820 mm
Shipping depth:	900 mm
Shipping volume:	0.89 m³
[NOT TRANSLATED]	EG72F

The company reserves the right to make modifications to the products without prior notice. All information correct at time of printing.

2026.11.20